*202.006 **TOMATO SLICER 'TYPE JUMBO'**
EXPLODED VIEW / SPARE PART LIST

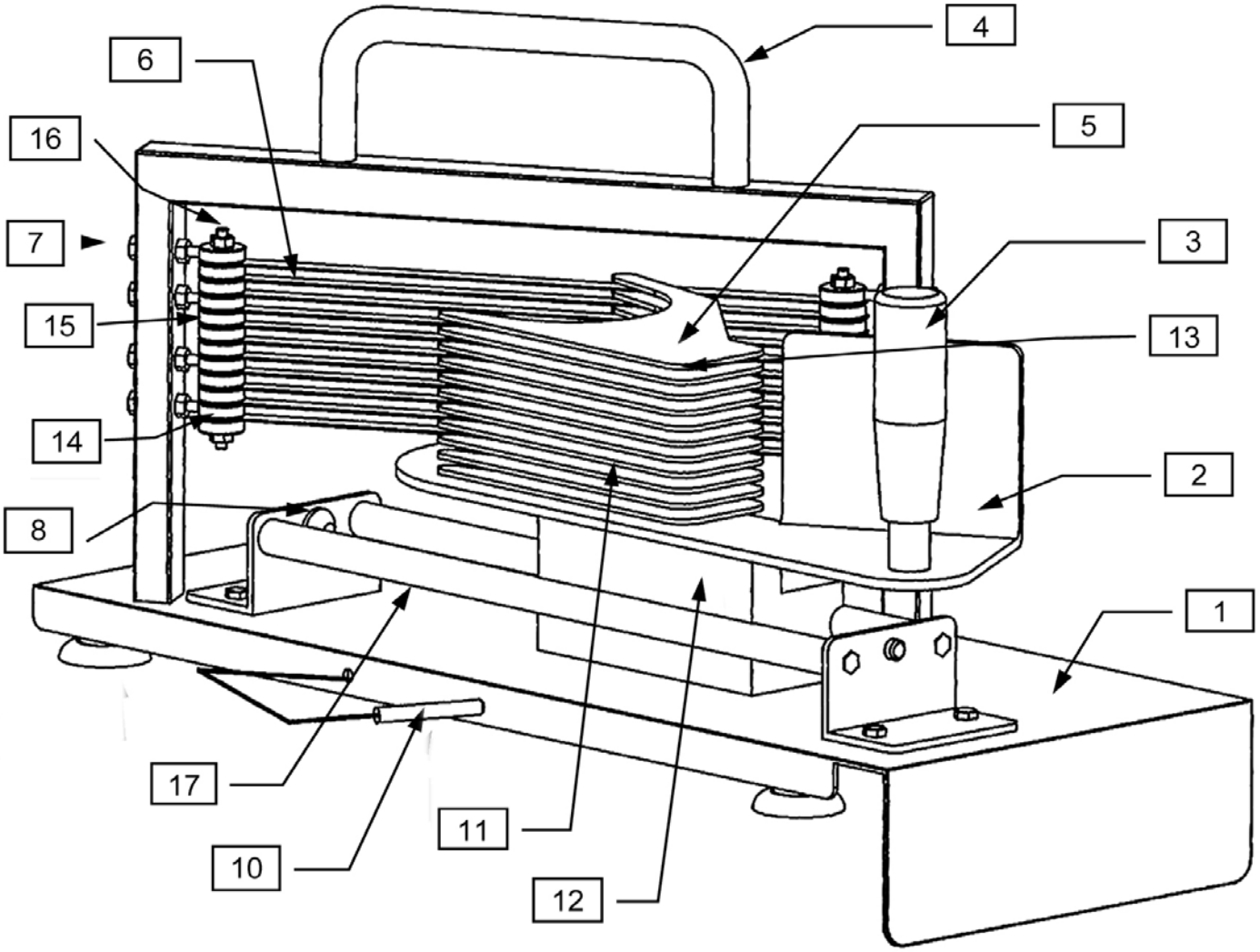

NUMBER	REFERENCE	DESCRIPTION	Q'TY
1	CTX030	BASE ONLY	
2	CTX014	ARM PUSHER ONLY WITHOUT HANDLE AND PLASTIC PLATES	
3	CTX019	BLACK HANDLE WITH AXLE AND SCREW	
4	CTX031	CARRIAGE HANDLE WITH DOCK	
5	CTX017	STAINLESS STEEL PLATE	
6	CTX012	SET OF 11 BLADES	
7	CTX22	SET OF 8 SCREWS FOR BLADES	
8	CTX23	BLACK STOPPER	
9	GX016	SUCTIONS	
10	CTX24	SECURITY PIN	
11	CTX016	SET OF 10 PLASTIC THIN PLATE	
12	CTX25	ARM PUSHER SUPPORT	
13	CTX028	PUSHER SPACER	
14	CTX20	TAPPED RING	
15	CTX21	UNTAPPED RING	
16	CTX032	THREADED STICK	
17	CTX026	GUIDE DIAM 44MM / CTX	