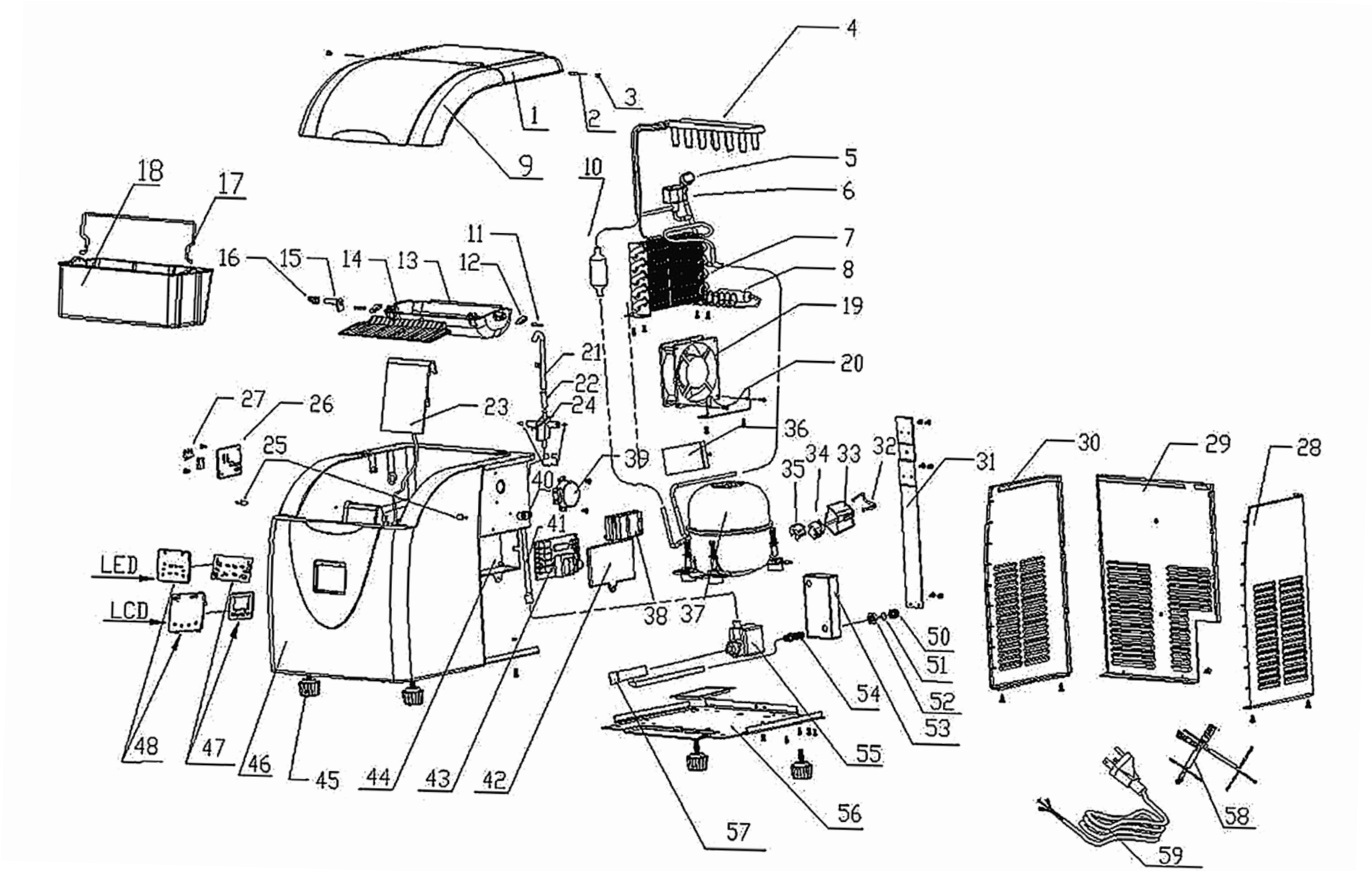905.610 **IJSBLOKJESMACHINE** - EXPLODED VIEW